RS-FYLGZ-N01-1-EX Optical Tipping Bucket Rain and Light Integrated Sensor User Manual(485 type)

Document version:V1.0

Catalog

1. Product introduction 3
1.1 Product overview 3
1.2 Function features 3
1.3 Main technical parameters 3
1.4 Product models 4
2. Equipment installation instruction 4
2.1 Equipment dimension 4
2.2 Inspection before equipment installation 4
2.3 Outdoor installation and adjusting 5
2.4 Wiring instruction 6
3. Configuration software installation and usage 6
3.1 Software selection 6
3.2 Parameter setting 6
4. Communication protocol 7
4.1 Communication basic parameters 7
4.2 Data frame format definition 7
4.3 Register address 8
4.4 Communication protocol and explanation 9
4.4.1 Query the current rain value 9
The address code read is the real address of the device: 01 10
5. Care and maintenance 10
5.1 Daily maintenance 10
5.2 Cautions in use 11
5.3 Common problems and solutions 11
6. Contact information 12
7. Document history 12

1. Product introduction

1.1 Product overview

This product is a transmitter to measure rainfall and light, the internal is adopted optical induction principle to measure rainfall. Rainfall detection is reliable, different from the traditional mechanical rainfall sensor, optical rainfall sensor has smaller volume, be more sensitive and reliable, more intelligent, and easy to maintain. The interior is adopted high-precision photosensitive sensor, the illuminance measurement is accurate, and the output value measurement unit is Lux.

It can be widely used in intelligent irrigation, ship navigation, mobile weather stations, automatic doors and Windows, geological disasters and other industries and fields that need to measure rainfall and illumination.

1.2 Function features

- Small volume, light weight, simple installation
- Low power consumption design, energy saving
- High reliability, it can work normally in high temperature and high humidity environment
- Easy maintain design, not easy to be covered by falling leaves
- Rain measurement is adopted optical measurement, accurate measurement
- High precision illumination detection measurement range is 0-200,000 Lux
- RS485 signal output, communication distance is long, communication is stability

1.3 Main technical parameters

Rain feeling diameter	6cm	
Power supply voltage	9~30V DC	
Power consumption	Less than 0.24W	
Resolution	Rain	Standard 0.1mm
	Light	1 Lux
Typical precision	Rain	±4%[1]
	Light	±7%(25°C)
Maximum instantaneous rainfall	24mm/min	
Light intensity range	0-200,000 Lux	
Output mode	RS485 output	
Sensor component temperature and humidity resistance	-40-80℃ 0~95%(relative humidity), no condensing	
Working voltage range	Standard atmosphere ±10%	
Long-term stability	Light	≤5%/y

[1]From the lab internal simulated rainfall test.

The performance data stated above were obtained under test conditions that using our test system and software. In order to continuously improve the product, we reserve the right to change the design features and specifications without prior notice. Although this product has high reliability, we recommend to check whether the function of the equipment is normal and whether the parameters are up to standard before use to ensure that on-site use is not affected.

1.4 Product models

RS-				Company code	
	FYL-			Optical tipping bucket rain gauge	
	FYLGZ-			Optical tipping bucket rain + 200,000 illumination	
		N01-		RS485 output	
			1-	-1 shell	
				EX	Fixed code

2. Equipment installation instruction

2.1 Equipment dimension

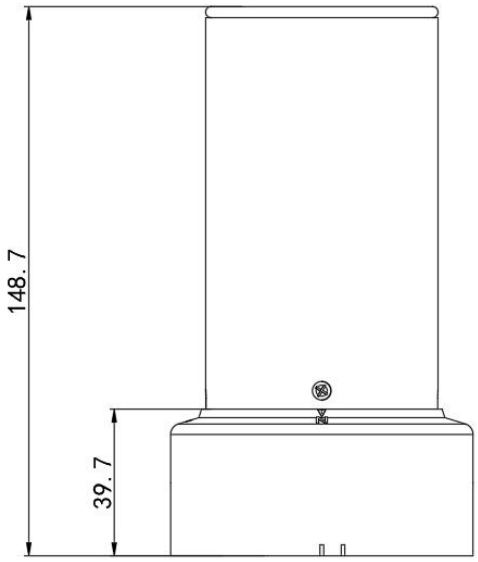

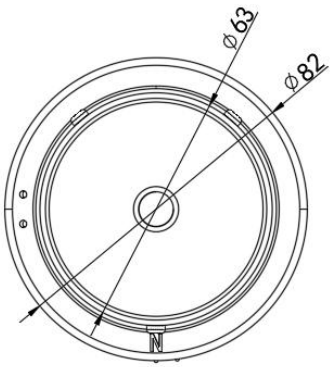

2.2 Inspection before equipment installation

Equipment list

- Main equipment device 1pc
- Holder 1pc
- M4*35 screws 4pcs
- M4*10 screws and nuts 3pcs of each
- Certificate of conformity, warranty card 1pc of each

Check that the shell is tightened and the PG7 below is locked without loosening.

2.3 Outdoor installation and adjusting

You need to install the rain sensor at a empty place, no shelter at the surroundings and the upper places.

Install the device on the holder of the components, and use 4pcs M4*35 304 stainless steel screws and nuts to fixed the device and holder.

After then, install the holder to the position that want to install(need to drill a Φ5 round hole at the position that to be installed), the holder need to be placed horizontally for installation, at final, use 3pcs M4*10 304 stainless steel screws and nuts to fixed the holder and device.

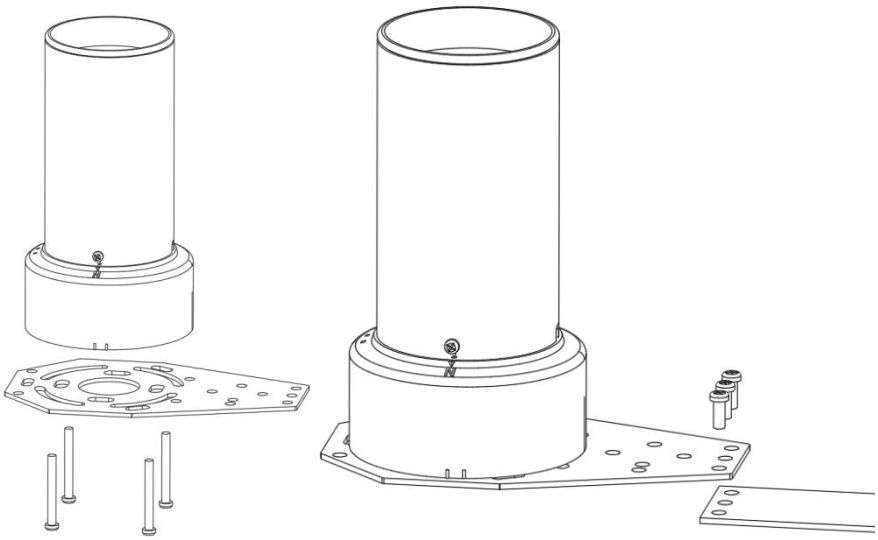

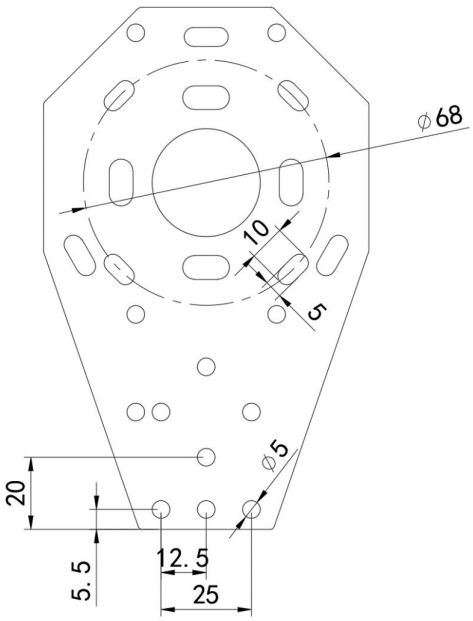

If do not use the holder, customer can install the device in their own way refer to the copper stud location and dimension in the follow figure.

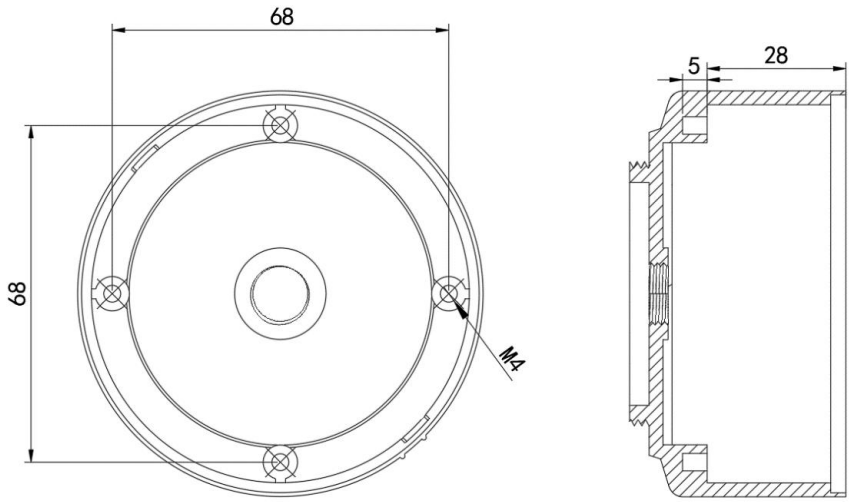

2.4 Wiring instruction

Wire color	Instruction
brown	V+ (10~30V DC)
black	V-
yellow	485A
blue	485B

3. Configuration software installation and usage

3.1 Software selection

Open the document pack, select “Debug software”--”485 parameter configuration software”,find and oepn it.

3.2 Parameter setting

① Select the correct COM port (check the COM port in "My Computer — Properties — Device Manager—Port"). The following figure lists the driver names of several different 485 converters.

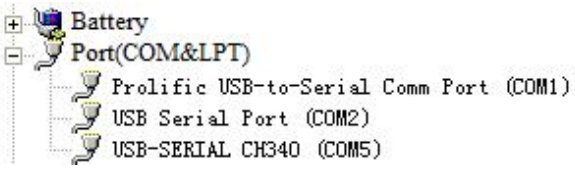

② Connect only one device alone and power it on, click the test baud rate of the software, the software will test the baud rate and address of the current device, the default baud rate is 4800bit/s, and the default address is 0x01.

③ Modify the address and baud rate according to the needs of use, and at the same time, you can query the current function status of the device.

④ If the test is unsuccessful, please recheck the equipment wiring and 485 driver

installation.

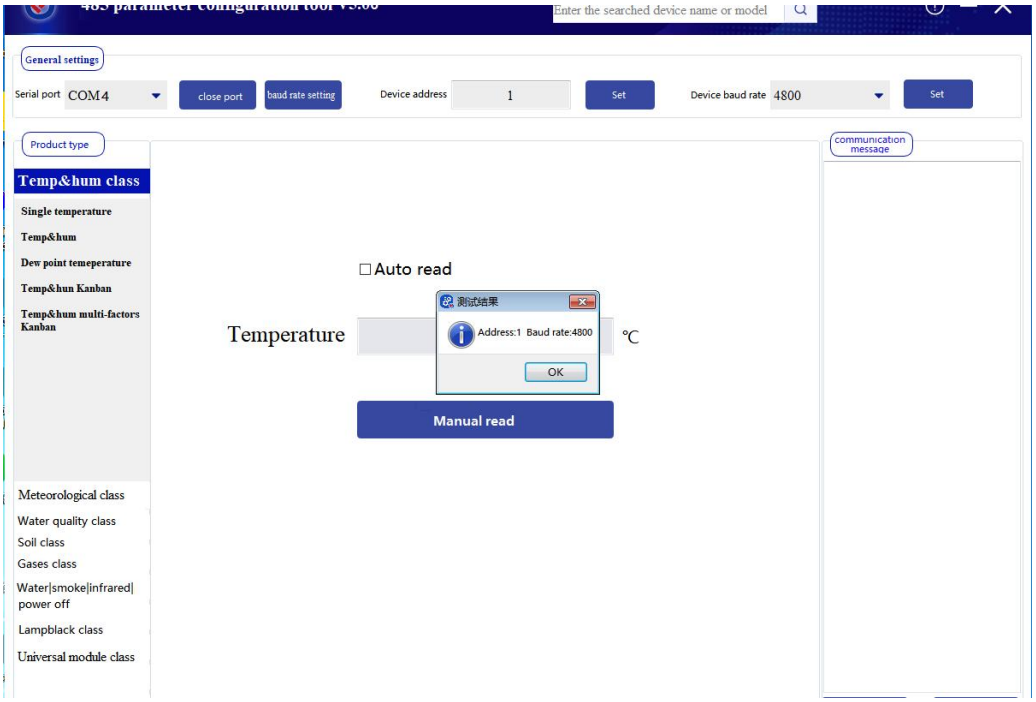

4. Communication protocol

4.1 Communication basic parameters

Encode	8-bit binary
Data bit	8-bit
Parity check bit	null
Stop bit	1-bit
Error checking	CRC(Cyclic Redundant Code)
Baud rate	1200bit/s, 2400bit/s, 4800bit/s, 9600bit/s, 19200bit/s,38400bit/s,57600bit/s, 115200bit/s can be set, the factory default is 4800bit/s

4.2 Data frame format definition

Adopt Modbus-RTU communication protocol, the format is as follows:

Initial structure ≥ 4 bytes of time

Address code = 1 byte

Function code = 1 byte

Data area = N bytes

Error check = 16-bit CRC code

Time to end structure ≥ 4 bytes

Address code: the address of the transmitter, which is unique in the communication network

(factory default 0x01).

Function code: the command function instruction issued by the host, the transmitter can use the function code 0x03 (read register data) and 0x06 (write register data).

Data area: The data area is the specific communication data, pay attention that the 16bits data high byte come first!

CRC code: two-byte check code.

Host query frame structure:

Address code	Function code	Register start address	Register length	Check code low bit	Check code high bit
1byte	1byte	2byte	2byte	1byte	1byte

Slave machine response frame structure:

Address code	Function code	Number of valid bytes	1st data area	Second data area	Nth data area	Check code
1byte	1byte	1byte	2byte	2byte	2byte	2byte

4.3 Register address

Register address	PLC or configuration address	Operating(hexadecimal)	Scope content and definition
0000H	40001	03/06	Rain value, 10times of actual value
0002H	40003	03	Illumination(32 bits unsigned, high byte is in front Actual value, unit is Lux
0003H	40004		
0006H	40007	03	Illumination Actual value, unit is hundred Lux
0050H	40081	03/06	Light intensity deviation value
07D0H	42001	03/06	Device address 1~254(factory default is 1)
07D1H	42002	03/06	Device baud rate 0 means 2400 1 means 4800 2 means 9600 3 means 19200 4 means 38400 5 means 57600 6 means 115200 7 means 1200

4.4 Communication protocol and explanation

4.4.1 Query the current rain value

Inquiry frame:

Address code	Function code	Register start address	Data length	Check code low bit	Check code high bit
0x01	0x03	0x00 0x00	0x00 0x01	0x84	0x0A

Response frame:

Address code	Function code	Returns the number of valid bytes	Rainfall value	Check code low bit	Check code high bit
0x01	0x03	0x02	0x00 0x0A	0x38	0x43

Current rainfall value: (Uploaded value is expanded by 10 times)

000A (hexadecimal system) = 10 (decimal system) → rainfall value: 1.0mm

Note: The device will be automatically cleared and calculated the rainfall again after power on every time, you can get receive the cleared rainfall data via below operating.

4.4.2 Clear rainfall data

Inquiry frame:

Address code	Function code	Start register	Clear command	Check code low bit	Check code high bit
0x01	0x06	0x00 0x00	0x00 0x5A	0X09	0XF1

Response frame:

Address code	Function code	Start register	Clear command	Check code low bit	Check code high bit
0x01	0x06	0x00 0x00	0x00 0x5A	0X09	0XF1

4.4.3 Query the current light intensity

Inquiry frame:

Address code	Function code	Register start address	Data length	Check code low bit	Check code high bit
0x01	0x03	0x00 0x02	0x00 0x02	0x65	0xCB

Response frame:

Address code	Function code	Return the valid data number	Light intensity low bit	Light intensity high bit	Check code low bit	Check code high bit
0x01	0x03	0x04	0x00 0x03	0x0D 0x40	0x0F	0x53

Light intensity calculation instruction:

The protocol can be used only for devices that under 0~200,000Lux range, unit is 1Lux

30D40 H(hexadecimal) = 200000=> light intensity=200000 Lux

4.4.4 Modify the current address

Inquiry frame:(Assume the current address is 01, need to modify it to 02)

Address code	Function code	Starting address	Modify value	Check code low bit	Check code high bit
0x01	0x06	0x07 0xD0	0x00 0x02	0x08	0x86

Response frame:

Address code	Function code	Starting address	Modify value	Check code low bit	Check code high bit
0x01	0x06	0x07 0xD0	0x00 0x02	0x08	0x86

4.4.5 Modify the current baud rate

Inquiry frame:(Assume the current baud rate is 4800, modify it to 9600)

Address code	Function code	Starting address	Modify value	Check code low bit	Check code high bit
0x01	0x06	0x07 0xD1	0x00 0x02	0x59	0x46

Response frame:

Address code	Function code	Starting address	Modify value	Check code low bit	Check code high bit
0x01	0x06	0x07 0xD1	0x00 0x02	0x59	0x46

4.4.6 Query the address

When the user forgets the address, the following function codes can be used to query the address.Interrogation frame:

Inquiry frame:

地址码	功能码	起始地址	数据长度	校验码低位	校验码高位
0xFF	0x03	0x07 0xD0	0x00 0x01	0x91	0x59

Response frame:

Address code	Function code	Returns the valid bytes number	Address	Check code low bit	Check code high bit
0xFF	0x03	0x02	0x00 0x01	0x50	0x50

The address code read is the real address of the device: 01

5. Care and maintenance

5.1 Daily maintenance

The instrument will be used outdoors for a long time and the operating environment is very harsh. Therefore, the inner wall of the rain-bearing port of the instrument should be wiped with a

soft cloth frequently to keep the rain-bearing port clean. For long term working devices, it should be cleaned once a month, and must be cleaned every three months.

5.2 Cautions in use

Do not use a rain sensor in any place where there are serious consequences due to incorrect sensor indications. It is the responsibility of the system designer or system integrator to ensure that fault tolerance does not lead to catastrophic consequences if one component (including the rain sensor) fails. The company is not responsible for any consequences caused by incorrect sensor indications.

5.3 Common problems and solutions

The device cannot connect to the PLC or computer.

Possible reasons:

1) The computer has multiple COM ports, and the selected port is incorrect.

2) The device address is wrong, or there are devices with duplicate addresses (the factory default are all 1).

3) Baud rate, check mode, data bit, stop bit error.

4) The 485 bus is disconnected, or the A and B lines are reversed.

5) If the number of devices is too large or the wiring is too long, power supply should be provided nearby, 485 booster should be added, and 120Ω terminal resistance should be added at the same time.

6) The USB to 485 driver is not installed or damaged.

7) The equipment is damaged.

6. Contact information

Shandong Renke Control Technology Co., Ltd.

Marketing Center: 10th Floor, East Building, Building 8, Shuntai Plaza, High-tech Zone, Jinan City, Shandong Province

Postcode: 250101

Tel: 400-085-5807

Fax: (86) 0531-67805165

Website: www.renkeer.com

Cloud platform address: en.0531yun.com

Shandong Renke Control Technology Co.,Ltd
Official website

Welcome to pay attetion to the WeChat public platform,enjoy convenient service

7. Document history

V1.0 Document establishment